More than
50 years
of experience

ALCE
TRANSFORMING
SUPPORTING

INSULATORS & EPOXY PARTS

ABOUT ALCE

Established in 1968, ALCE has a long-standing reputation in the design and manufacture of measuring transformers, insulators and epoxy parts, with a history spanning over 50 years.

ALCE Elektrik operates in the international electromechanical sector, offering customer-focused, customized solutions to global energy distribution companies and panel manufacturers.

With its philosophy of continuous improvement, high quality standards, and customer satisfaction-oriented approach, ALCE is a well-established and respected brand that provides reliable solutions for global energy distribution companies and switchgear manufacturers, adding value to the industry. ALCE Elektrik is a reliable supplier and long-term business partner operating on an international scale.

INDOOR INSULATORS

	Type	Page
	INDOOR INSULATORS	02 - 03
	CAPACITIVE DIVIDER INSULATORS	04 - 05
	WALL BUSHINGS	06 - 07
	BOLT BUSHINGS	08 - 09
	CUSTOM DESIGNS	10 - 12

INDOOR POST INSULATORS

APPLICATION
Epoxy cast resin indoor post insulators can be used for all indoor applications.
For tropical conditions same types (with special fixing parts) are available .
They are suitable for temperatures from -25°up to +90°C.

CONSTRUCTION
Epoxy cast resin indoor post insulators are cylindrical solid insulators, with proper creepage and number of ripples.
The main dimensions are in accordance with IEC 60273 -1990.
Auxiliary inserts are connected with main insert electrically.

TESTS
The following tests,according to IEC 60660 - 1999 are performed:

ROUTINE TESTS
- Visual inspection
- Testing of conductive connection of fixing inserts for post insulators type B (IEC 60660 -1999)
- Power-frequency withstand voltage (dry)
- Partial discharge measurement

SAMPLE TESTS
- Testing of minimum failing load for bending

ADDITIONAL TESTS
- Lightning impulse withstand voltage test (on request)
- Testing of minimum failing loads (nominal loads) for bending

TECHNICAL INFORMATIONS
- The dimensions shown in tables are nominal dimensions. Please check the technical drawing for tolerance values.
- The bending strength shown in tables were obtained through calculations in accordance with IEC 60273.
- We reserve the right to make changes to our technical specifications in order to improve our products.

Rated insulation levels for post insulators

Max. operating voltage (kV)	Dry power frequency withstand voltage acc. to IEC 60273 (kV)	Lightning impulse withstand voltage acc. to IEC 60273 (kV)
3,6	10	40
7,2	28	60
12	38	75
17,5	50	95
24	50	125
36	70	170

Tightening torques

The table below applies when the length of the screw within the threaded insert is at least 1,4 x screw diameter.
The values in the table below are given for standard products.

Screw	Rated value (Nm)	Max. hole diameter in busbar (mm)
M6	7	8
M8	15	10
M10	30	12
M12	45	15
M16	110	19
M20	220	24
M24	290	28

Specifications and product designs are subject to change without prior notice in view of continuous improvements.

INDOOR POST INSULATORS

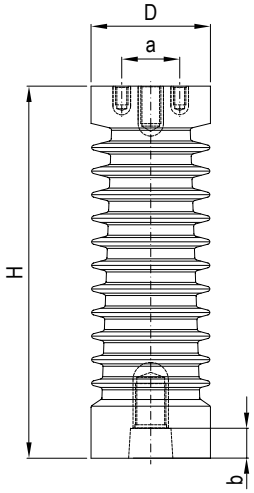

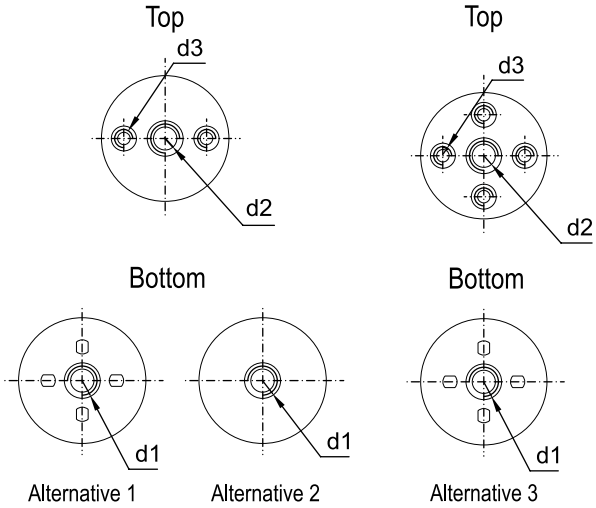

Stock	Art.No	Designation	Alternative	Type	Max. Operating Voltage (kV)	Min. Creepage (mm)	Ripples	Bendign Strength (kN)	Tensile Strength (kN)	Dimension (mm) h	d	d1	d2	d3	a	b	Weight (kg)	Pcs/ Box
	1000191	RMA 3	2		3,6	88	1	5	10	65	62	M12 X 18	M10 X 15	M6 X 10	36	-	0,32	75
*	1000142	RMA 10S	2		7,2	130	2	6	20	95	58	M16 X 26	M10 X 15	M6 X 10	36	12	0,40	32
*	1190682	RMA 10S	1	J06-60	7,2	133	2	6	20	95	60	M16 X 33	M12 X 18	M6 X 12	36	8	0,45	50
	1187936	RMA 10S	1		7,2	133	2	6	20	95	60	M16 X 33	M10 X 16	M6 X 12	36	8	0,45	50
	1000145	RMB 10S	2	J010-60	7,2	128	2	10	20	95	71	M16 X 30	M16 X 30	M10 X 15	46	10	0,65	9
*	1051407	RMA 10N	1	J06-75	12	182	5	6	20	130	60	M16 X 33	M12 X 18	M6 X 10	36	8	0,58	12
*	1051406	RMA 10N	1		12	182	5	6	20	130	60	M16 X 33	M10 X 20	M6 X 10	36	8	0,59	12
	1187937	RMA 10N	1		12	176	5	6	20	130	60	M16 X 33	M10 X 20	M6 X 12	36	15	0,58	36
*	1048515	RMB 10N	1	J010-75	12	187	5	10	30	130	77	M20 X 35	M16 X 30	M10 X 15	46	10	0,98	9
*	1000149	RMB 10N	2	J010-75	12	240	7	10	30	130	77	M20 X 35	M16 X 30	M10 X 15	46	12	0,95	9
	1048425	RMC 10N	1	J016-75	12	191	5	16	40	130	90	M20 X 40	M16 X 33	M10 X 16	66	15	1,38	9
	1000374	RMD 10N	3		12	261	5	25	-	130	130	M24 X 35	M16 X 20	M10 X 16	66	10	2,85	4
*	1000165	RMA 20S	2		17,5	242	6	6	20	175	70	M16 X 33	M10 X 20	M6 X 10	36	12	0,98	16
*	1000167	RMA 20S	2	J06-95	17,5	242	6	6	20	175	70	M16 X 33	M12 X 18	M6 X 10	36	12	0,99	16
	1187938	RMA 20S	1		17,5	258	6	6	20	175	70	M16 X 33	M10 X 20	M6 X 12	36	18	1,00	25
	1002649	RMA 20S	1	J06-95	17,5	242	6	6	20	175	70	M16 X 33	M12 X 18	M6 X 12	36	18	1,01	16
*	1056040	RMB 20S	1	J010-95	17,5	237	6	10	30	175	80	M20 X 35	M16 X 30	M10 X 15	46	15	1,33	9
*	1051752	RMA 20N	1		24	318	8	6	20	210	70	M16 X 35	M10 X 20	M6 X 10	36	20	1,18	16
	1051753	RMA 20N	1	J06-125	24	318	8	6	20	210	70	M16 X 33	M12 X 18	M6 X 10	36	20	1,20	16
	1187939	RMA 20N	1		24	300	8	6	20	210	70	M16 X 33	M10 X 20	M6 X 12	36	18	1,20	25
	1000184	RMA 20N	2	J06-125	24	366	8	6	20	210	75	M16 X 33	M12 X 18	M6 X 10	36	12	1,23	16
*	1055955	RMB 20N	1	J010-125	24	313	8	10	30	210	86	M20 X 35	M16 X 30	M10 X 15	46	17	1,83	9
*	1042542	RMA 30N	1		36	465	11	5	20	300	74	M16 X 35	M10 X 20	M6 X 10	36	12	1,67	9
*	1042540	RMA 30N	1	J06-170	36	465	11	6	20	300	74	M16 X 35	M12 X 18	M6 X 10	36	12	1,67	9
	1188070	RMA 30N	1		36	525	11	6	20	300	80	M16 X 36	M10 X 20	M6 X 12	36	18	2,00	16
	1190651	RMA 30N/H:325	1		36	550	11	6	20	325	80	M16 X 36	M10 X 20	M6 X 12	36	18	2,30	16
	1000199	RMA 30N	1	J06-170	36	520	11	6	20	300	80	M16 X 35	M12 X 18	M6 X 10	36	12	2,07	9
	1000201	RMB 30N	2	J010-170	36	488	11	10	30	300	95	M24 X 45	M16 X 30	M10 X 15	46	12	3,07	6
*	1057201	RMB 30N	1	J010-170	36	495	11	10	30	300	95	M24 X 36	M16 X 30	M10 X 15	46	24	3,06	6
	1000383	RMC 30N	1	J016-170	36	453	11	16	40	300	115	M30 X 45	M16 X 30	M10 X 16	66	23	4,76	3
	1000203	RMC 30N	2	J016-170	36	453	11	16	40	300	115	M24 X 46	M16 X 30	M10 X 12	66	23	4,74	4
	1188496	RMB 45	3	J08-250	45	530	11	8	20	500	120	M24 X 60	M16 X 35	M12 X 15	66	32	7,10	3

*** Item on stock**

NECESSARY INFORMATION FOR ORDERING:

1- Voltage detecting system: HR or LRM system.
2- Nominal voltage, Un (if different from Um).
3- Length of the coaxial cable for connection.
4- If the capacitance of the indicator is different from IEC 61243-5, please inform us about the capacitance of the indicator.

APPLICATION

Indoor voltage divider insulators are used for the detection of the presence of voltage on phase lines.
The basic operation principle is on the capacitive division of phase voltage.
The voltage divider insulators are used with capacitance coupled voltage indicating system.
They are suitable for temperatures from -25°C up to +90°C .

CONSTRUCTION

Indoor voltage divider insulators are epoxy cast resin.
The main dimensions and mechanical requirements are in accordance with DIN 48136.

TESTS

In addition to the tests applied to the standard insulators according to VDE 0441 part 3 (1984)

IEC 60660-1999 FOLLOWING ROUTINE TESTS ARE PERFORMED:

- Power-frequency withstand voltage test [dry]
- Partial discharge measurement
- Capacitance test

CAPACITIVE VOLTAGE INDICATING SYSTEM FOR MEDIUM VOLTAGE

Capacitance-coupled voltage indication system

The voltage indication system consists essentially of a capacitive voltage divider between a conductor L and earth. Moreover, the system includes an indicator for the detection of voltage and a surge arrester for protection purposes.

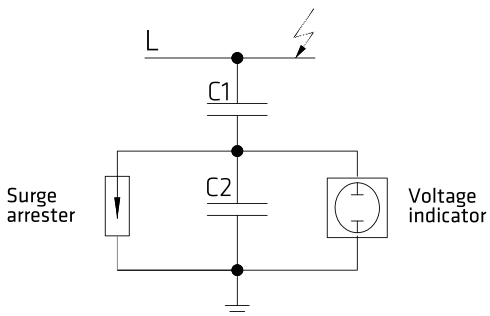

Function

Voltage division occurs due to the capacitive values of C1 and C2. According to IEC 61243-5 the indication should start in between 10 % of the read voltage of the system. For that reason, the capacitance values are adjusted in accordance within this range so that the indication starts. Up to 10% of the rated voltage. there shall be no indication. Under any circumstance above 45% of the rated. Voltage the indication shal be "ON".

The presence of voltage is indicated separately and independently for each phase conductor. The system operates without a battery or auxiliary supply. The energy required for the system is being drawn from the high voltage system (OVI system may require auxiliary power for some additional functions depending on the application).

Shock hazard protection

Voltage indication system does not present any risk during normal or disturbed operation.

During normal operation, the voltage divider capacitance Cl limits the currents to less than 100µ±A.

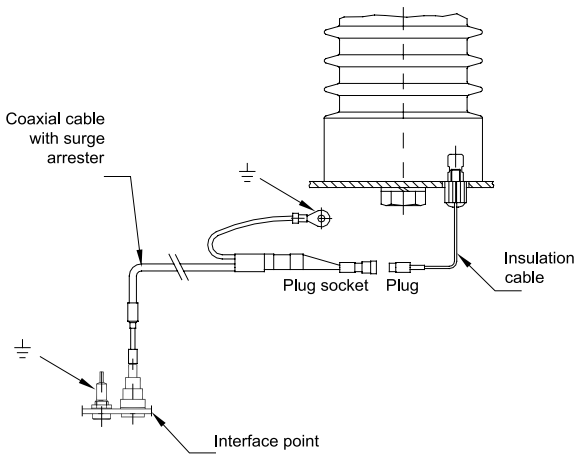

CAPACITIVE DIVIDER INSULATORS (FOR INDICATION AND STATIC LOADS)

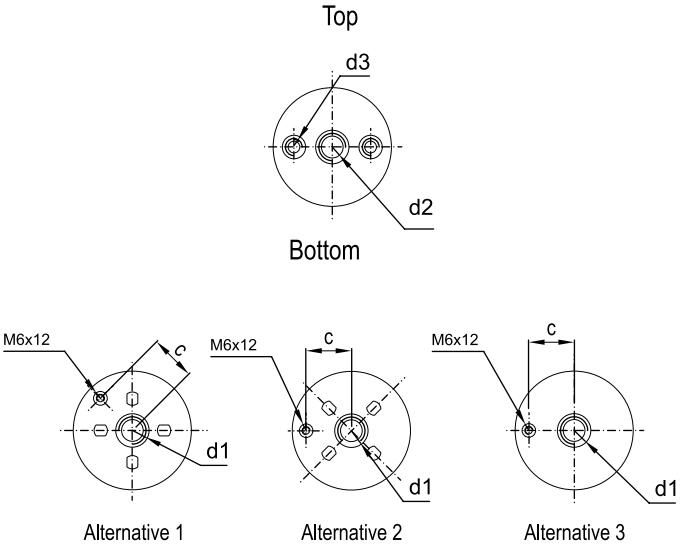

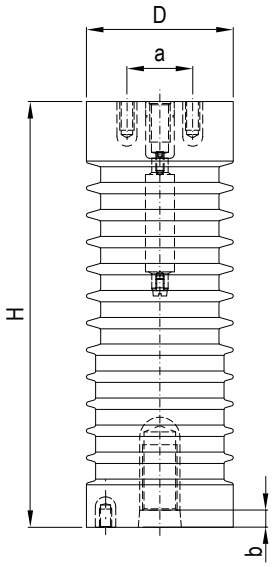

Stock	Art.No	Designation	Alternative	Max. Operating Voltage (kV)	Min. Creepage (mm)	Ripples	Capacitance (LCR Meter)	Bendign Strength (kN)	Tensile Strength (kN)	Dimension (mm) h	d	d1	d2	d3	a	b	c	Weight (kg)	Pcs/ Box
	1110553	DKA 10N	1	7,2	187	5	20pf ± 20%	5	10	130	77	M16 X 25	M10 X 20	M6 X 10	36	10	30	1,00	9
*	1062604	DKA 10N	2	12	187	5	20pf ± 20%	5	10	130	77	M16 X 25	M10 X 20	M6 X 10	36	10	30	1,00	9
*	1050506	DKA 10N	1	12	187	5	20pf ± 20%	5	10	130	77	M16 X 25	M10 X 20	M6 X 10	36	10	30	1,00	9
	1050506	DKA 10N	2	12	187	5	20pf ± 20%	5	10	130	77	M16 X 25	M10 X 20	M6 X 10	36	10	30	0,98	9
*	1050507	DKB 10N	1	12	187	5	20pf ± 20%	10	20	130	77	M20 X 24	M16 X 20	M10 X 15	46	10	30	1,00	9
	1058816	DKB 10N	2	12	187	5	20pf ± 20%	10	20	130	77	M20 X 24	M16 X 20	M10 X 15	46	10	30	1,00	9
	1057465	DKA 20S	2	17,5	237	6	20pf ± 20%	5	10	175	80	M16 X 35	M10 X 20	M6 X 10	36	15	30	1,33	9
	1050509	DKB 20S	1	17,5	237	6	20pf ± 20%	10	20	175	80	M20 X 35	M16 X 30	M10 X 15	46	15	30	1,37	9
	1055981	DKB 20S	2	17,5	237	6	15pf ± 20%	10	20	175	80	M20 X 35	M16 X 30	M10 X 15	46	15	30	1,37	9
	1055306	DKB 20S	2	17,5	237	6	20pf ± 20%	10	20	175	80	M20 X 35	M16 X 30	M10 X 15	46	15	30	1,37	9
	1055961	DKA 20N	1	24	313	8	15pf ± 20%	5	10	210	86	M16 X 35	M10 X 20	M6 X 10	36	17	30	1,85	9
*	1063879	DKA 20N	2	24	313	8	15pf ± 20%	5	10	210	86	M16 X 35	M10 X 20	M6 X 10	36	17	30	1,85	9
	1110844	DKA 20N	2	24	313	8	150pf ± 20%	5	10	210	86	M16 X 33	M12 X 20	M6 X 10	36	17	30	1,87	9
	1055960	DKB 20N	1	24	313	8	15pf ± 20%	10	20	210	86	M20 X 35	M16 X 30	M10 X 15	46	17	30	1,87	9
*	1063878	DKB 20N	2	24	313	8	15pf ± 20%	10	20	210	86	M20 X 35	M16 X 30	M10 X 15	46	17	30	1,87	9
	1000435	DKA 30N	1	36	438	11	7,5pf ± 20%	5	10	300	103	M16 X 35	M10 X 20	M6 X 10	36	12	34	3,88	6
	1050504	DKA 30N	3	36	488	11	7,5pf ± 20%	5	10	300	95	M16 X 33	M10 X 20	M6 X 10	36	12	34	3,09	6
	1068365	DKB-30N	1	36	495	11	15pf ± 20%	10	20	300	95	M24 X 36	M16 X 30	M10 X 15	46	24	34	3,06	6
*	1057203	DKB-30N	2	36	495	11	15pf ± 20%	10	20	300	95	M24 X 36	M16 X 30	M10 X 15	46	24	34	3,06	6
	1055553	DKB-30N	3	36	488	11	7,5pf ± 20%	10	20	300	95	M24 X 46	M16 X 30	M10 X 15	46	12	34	3,20	6
	1000436	DKB 30N	1	36	438	11	15pf ± 20%	10	20	300	103	M24 X 36	M16 X 30	M10 X 15	46	12	34	3,90	6
	1032399	DKB-30N	3	36	438	11	15pf ± 20%	10	20	300	103	M24 X 46	M16 X 30	M10 X 15	46	12	34	3,90	6
*	1051090	EK 30N	2	36	465	11	15pf ± 20%	4	10	300	74	M12 X 23	M10 X 20	M6 X 10	36	10	30	1,71	9

ATTENTION!

The insulators should be used for indicat on purposes and should not be exposed to excessive dynamic loads.
Highvoltage connection for indication shall be flexible cable.

WALL BUSHING TYPE GKR

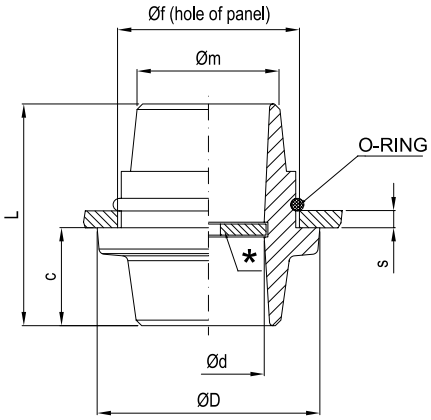

Figure 1

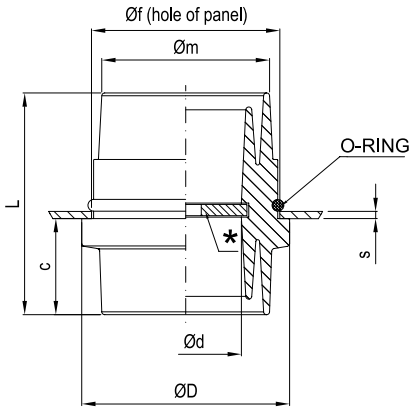

Figure 2

* EPDM bar holder

Art.No	Type	Rated Voltage (kV)	Figure	L	c	d	d1	m	f	s	Weight (kg)	Pcs/Box
1187940	GKR 12/55	6 kV in sheet of metal, 12 kV Insulating plate	1	120	53	110	55	78	95	6	0,73	40
-	GKR 12/55		1	120	53	110	55	78	95	on request	0,73	40
1207731	GKR 12/75		1	120	53	130	75	98	115	4,5	0,88	24
1187941	GKR 12/75		1	120	53	130	75	98	115	6	0,88	24
-	GKR 12/75		1	120	53	130	75	98	115	on request	0,88	24
1207981	GKR 12/95		1	120	53	150	95	118	135	6	1,1	8
-	GKR 12/95		1	120	53	150	95	118	135	on request	1,1	8
1209840	GKR 12/115		1	120	53	170	115	138	155	6	1,40	3
-	GKR 12/115		1	120	53	170	115	138	155	on request	1,40	3
1207993	GKR 24-36/55	24-36 kV Insulating plate	2	150	65	120	55	94	105	6	1,2	8
-	GKR 24-36/55		2	150	65	120	55	94	105	on request	1,2	8
1209841	GKR 24-36/75		2	150	65	140	75	109	125	5	1,44	10
-	GKR 24-36/75		2	150	65	140	75	109	125	on request	1,44	10
1209842	GKR 24-36/95		2	150	65	160	95	134	145	6	1,80	8
-	GKR 24-36/95		2	150	65	160	95	134	145	on request	1,80	8
1209843	GKR 24-36/115		2	150	65	180	115	160	165	6	2	8
-	GKR 24-36/115		2	150	65	180	115	160	165	on request	2	8

Max. Operating Voltage (kV)	Lightning Impulse Voltage (kV)	Min Distance "a" at Impulse Voltage (mm)	Dry Power Frequency Withstand Voltage at Distance "a" (kV)
12	75	60	42
24	125	178	75
36	170	260	95

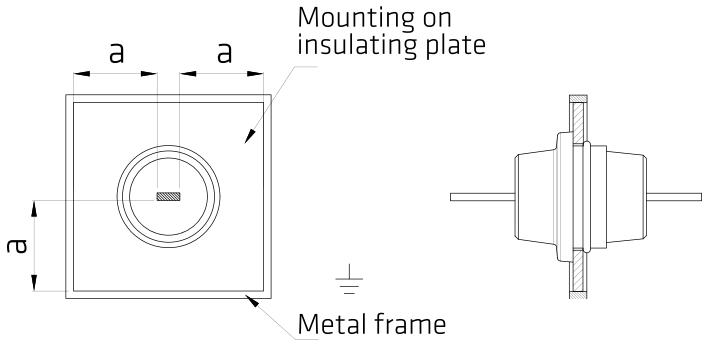

O-rings are also included with the products.
Please specify in your order the number and measurements of the busbars.
(e.g. 1 x50x10).These informations are needed for choosing right EPDM Holder.

GKB-12

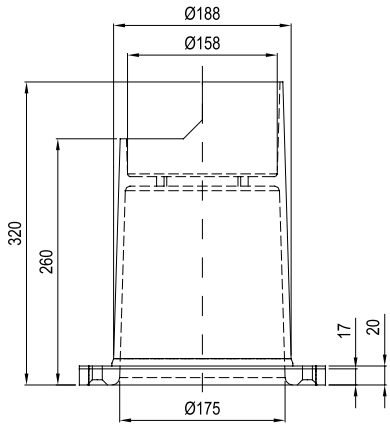

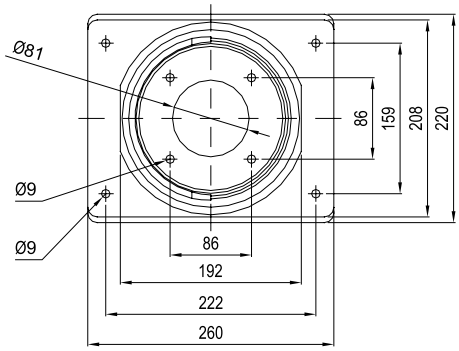

GKB-36

Dimensions and shape of the hole in the center (will be used for the assembly of fixed part) can change according to customer requirements.

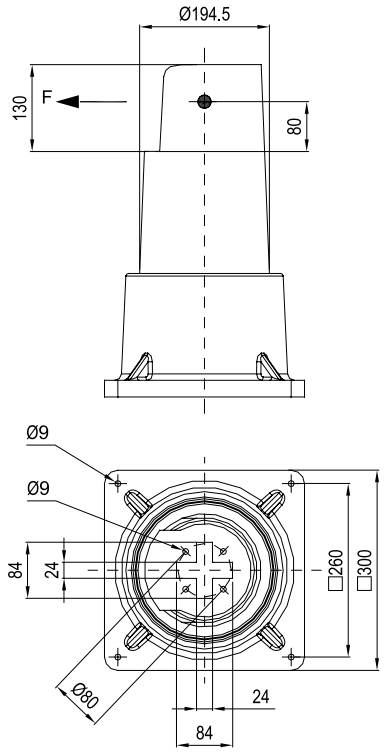

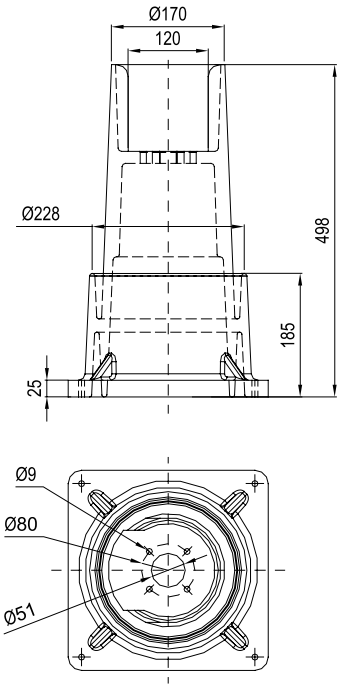

Art.No	Type	Rated Voltage (kV)	Insulation Voltage (kV)	Lightning Impulse (kV)	Min. Bending (N)	Busbar (mm)	Weight (kg)	Pcs/Box
1000319	GKB-12	12	28	75	4000	Ø80	3,45	1
1000347	GKB-36	36	70	170	3750	Ø50	12	1

INDOOR TO INDOOR
BOLT BUSHING TYPE DDGB

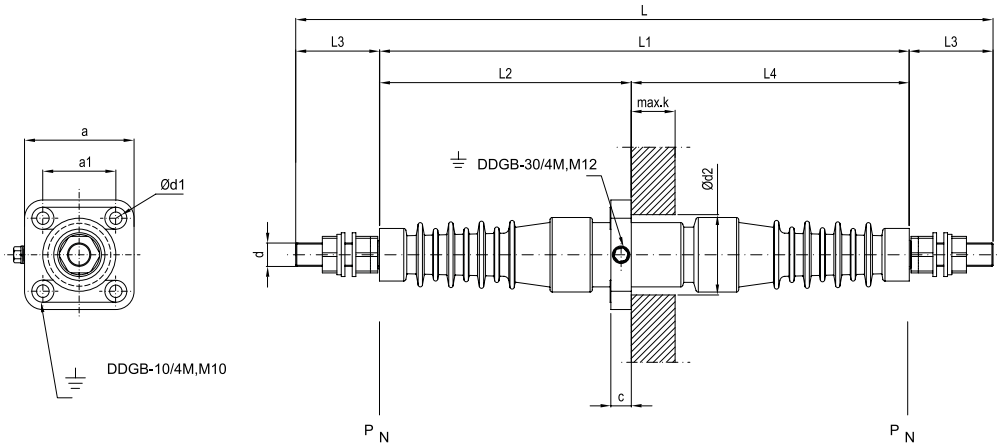

Figure 1

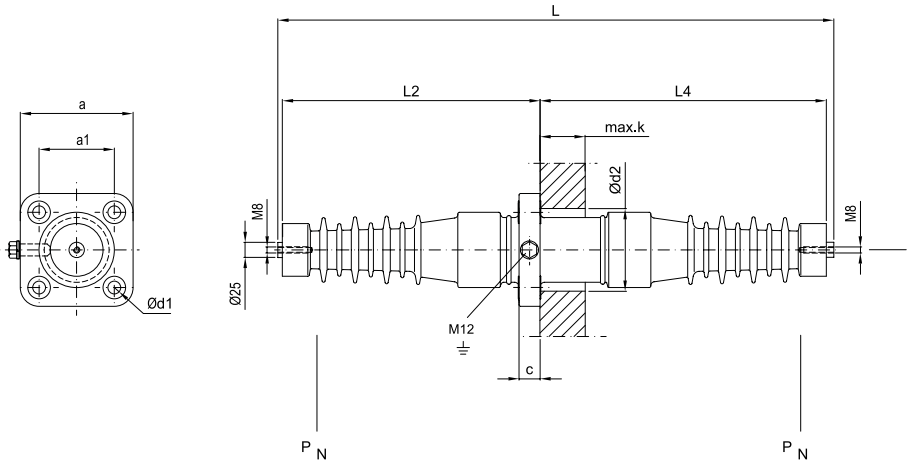

Figure 2

- Test load shall be applied to each end of the bushing separately.
- Assembly should be done according to the assembly instructions that are given with the product.

Art.No	Type	Figure	Max. Operating Voltage (kV)	Rated Current (A)	Bending Strenght (N)	Dimension (mm)												Weight (kg)	Pcs/ Box
						L	L1	L2	L3	L4	a	a1	c	d	Ød1	Ød2	k max		
1000016	DDGB-10/4M	1	12	250	3,75	385	287	131	50	156	135	100	21	M12	11	80	50	2,40	1
1000020	DDGB-10/4M	1	12	630	3,75	425	287	131	70	156	135	100	21	M20	11	80	50	3,18	1
1035384	DDGB-30/4M	2	36	630	3,75	-	725	343,5	-	381,5	150	100	28	M8 (Female)	17	110	60	7,85	1

OUTDOOR TO INDOOR BOLT BUSHING TYPE HDGB

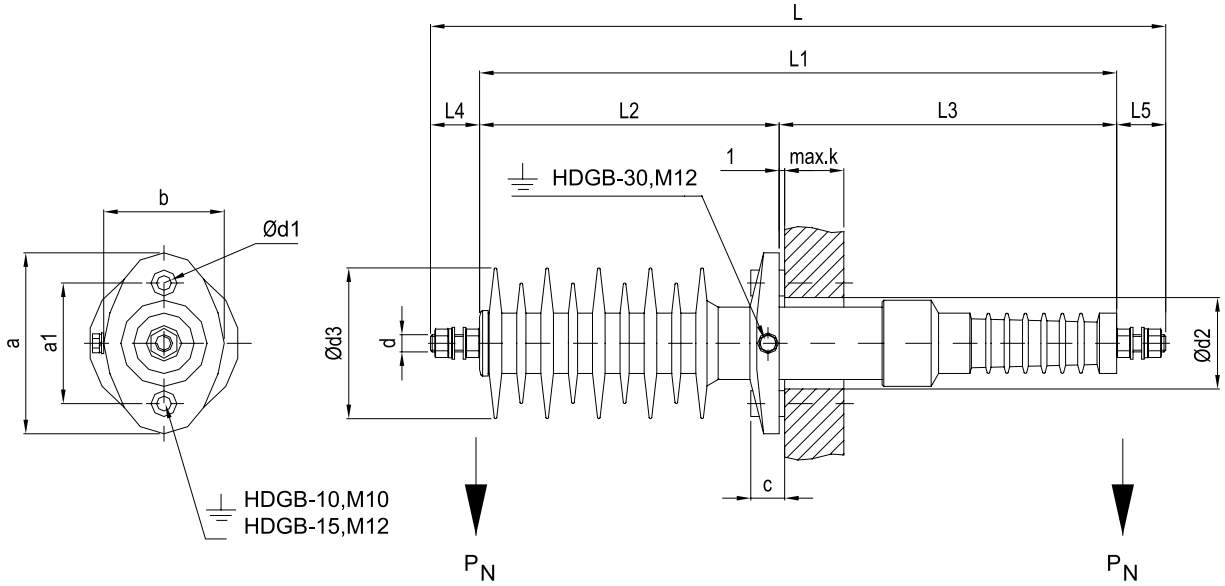

- Test load shall be applied to each end of the bushing separately.
- Assembly should be done according to the assembly instructions that are given with the product.

Art No.	Type	Rated Voltage (kV)	Insulation Voltage (kV)	Lightning Impulse Voltage (kV)	Rated Current (A)	Min. Bending (N)	Dimension (mm)													Weight (kg)	Pcs/ Box
							L	L1	L2	L3	L4	a	a1	b	c	d	Ød1	Ød2	k		
1000103	HDGB-30	36	70	170	630	3750	885	740	348	392	75	210	140	140	33	M20	17	110	60	11,35	1
1000107					1250		975				120					M32x1,5				16,74	

BUSHINGS

SF6 / VACUUM BREAKERS

CT BUSHINGS

ROTARY DISCONNETORS

ALCE ELEKTRİK SAN.ve TİC.A.Ş.
Ramazanoğlu Mah. Transtek Cad. No:6
Pendik 34906 İstanbul, TURKEY
P: +90 216 585 42 00 F: +90 216 378 23 27
www.alce-elektrik.com.tr
info@alce-elektrik.com.tr

IN_IT_2026_R03